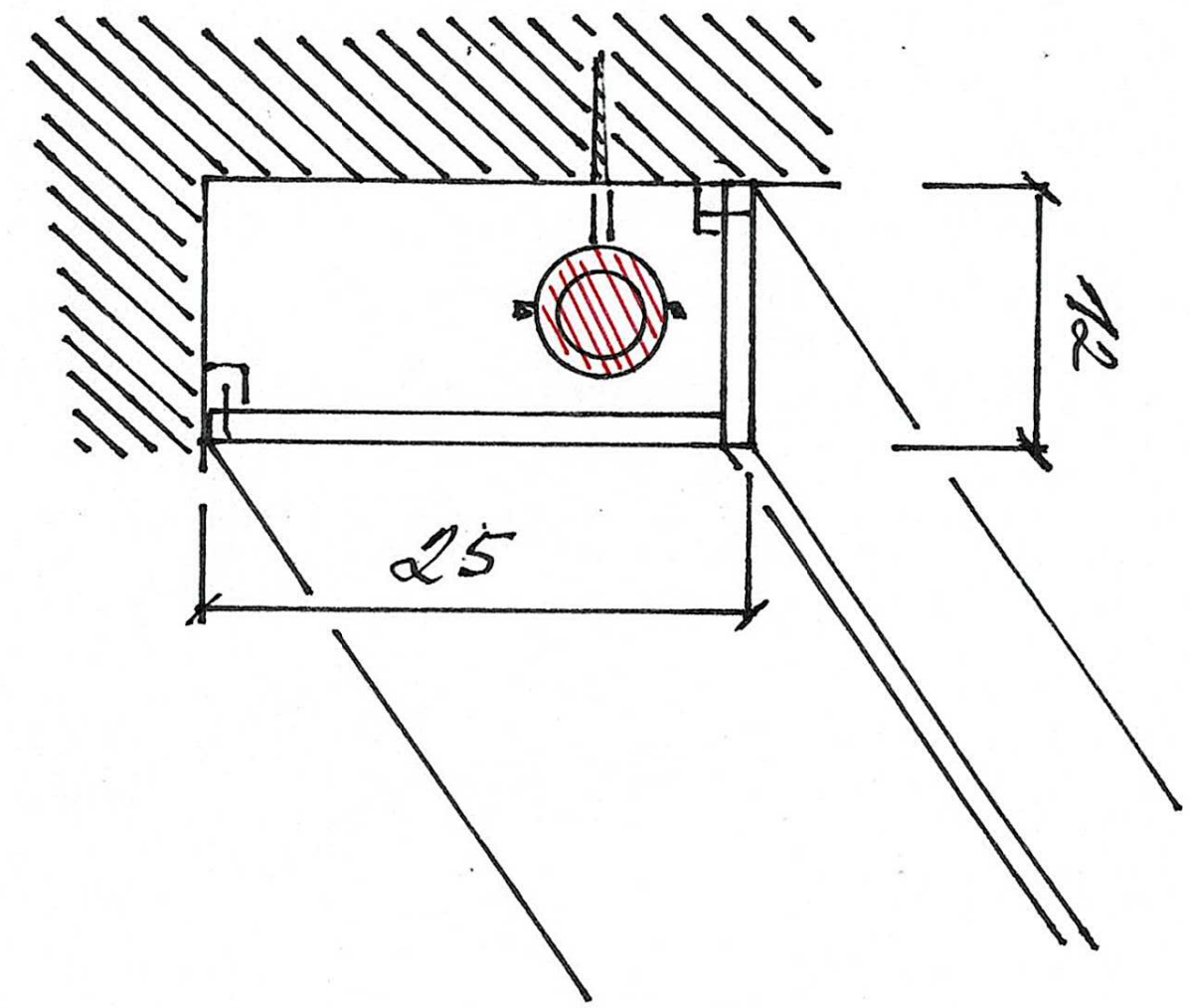
25
12