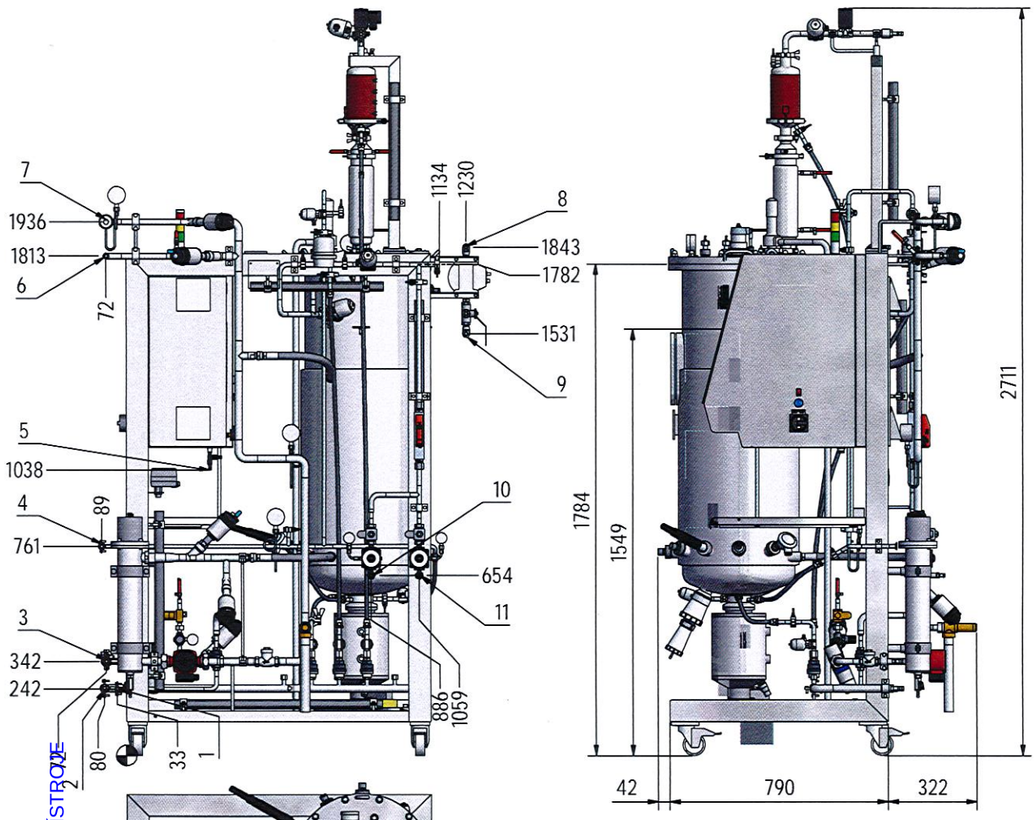

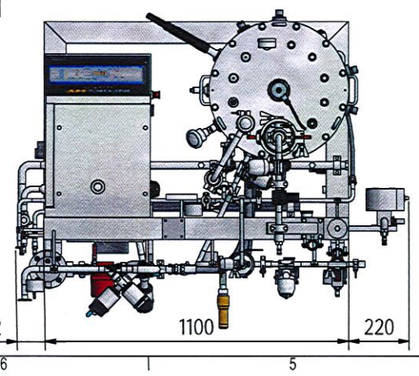

1. Not contaminated condensate / pressureless (Male adaptor NW13)
2. Contaminated condensate / pressureless (Male adaptor NW13)
3. Water in / ≥2.5 bar (Male adaptor NW13)
4. Clean steam in / 1.5 bar (Tri-Clamp ISO DN08; Clamp-ø = 25.0 mm)
5. Compressed air / 6.0 - 7.0 bar (Male adaptor NW10)
6. Water out / pressureless (Male adaptor NW13)
7. Steam in / 2.0 bar (Tri-Clamp ISO DN10; Clamp-ø = 50.5 mm)
8. Gas analysis / pressureless (Male adapter NW13)
9. Air out / pressureless (Male adaptor NW13)
10. N2 in / ≥3.0 bar (Male stud coupling NW13)
11. Air in / ≥3.0 bar (Male stud coupling NW13)

Tri-Clamp connections according ISO2852, ISO1127

Electrical power supply:
400V, 16A, 50Hz, RCD-Residual
Current Device, Art RCCB Type B

Oberfläche

Zulässige Abweichungen für Masse ohne Toleranzangabe nach ISO 2768-mK
Scharfe Kanten gebrochen

Index	Änderungs- Nr. & Beschrieb	Datum	Name

Ursprung:

Massstab: %, A3

Dimensional & Connection

Techfors TV 150L
VUPP

	Datum	Name
Erstellt	20.11.2017	FantiB
Geprüft	20.11.2017	FantiB

INFORS HT
CH- 4103 Bottmingen
+41 (0)61 425 77 00
www.infors-ht.com

Zeichnungsnummer: ENG-036629
Blatt 1
Index

"All rights (in particular the copyright) in this document belong to INFORS AG (Bottmingen, Switzerland). The document is given to you solely for your personal use according to the agreements Infors concluded with you; every use which exceeds the above-mentioned agreements(including the transmission to third parties, the making of copies, photocopies, extracts as well as the storage on data carries of any nature), requires the prior written consent by INFORS AG"

PŘÍLOHA Č. 5
TECHNICKÝ NÁKRES PŘÍSTROJE